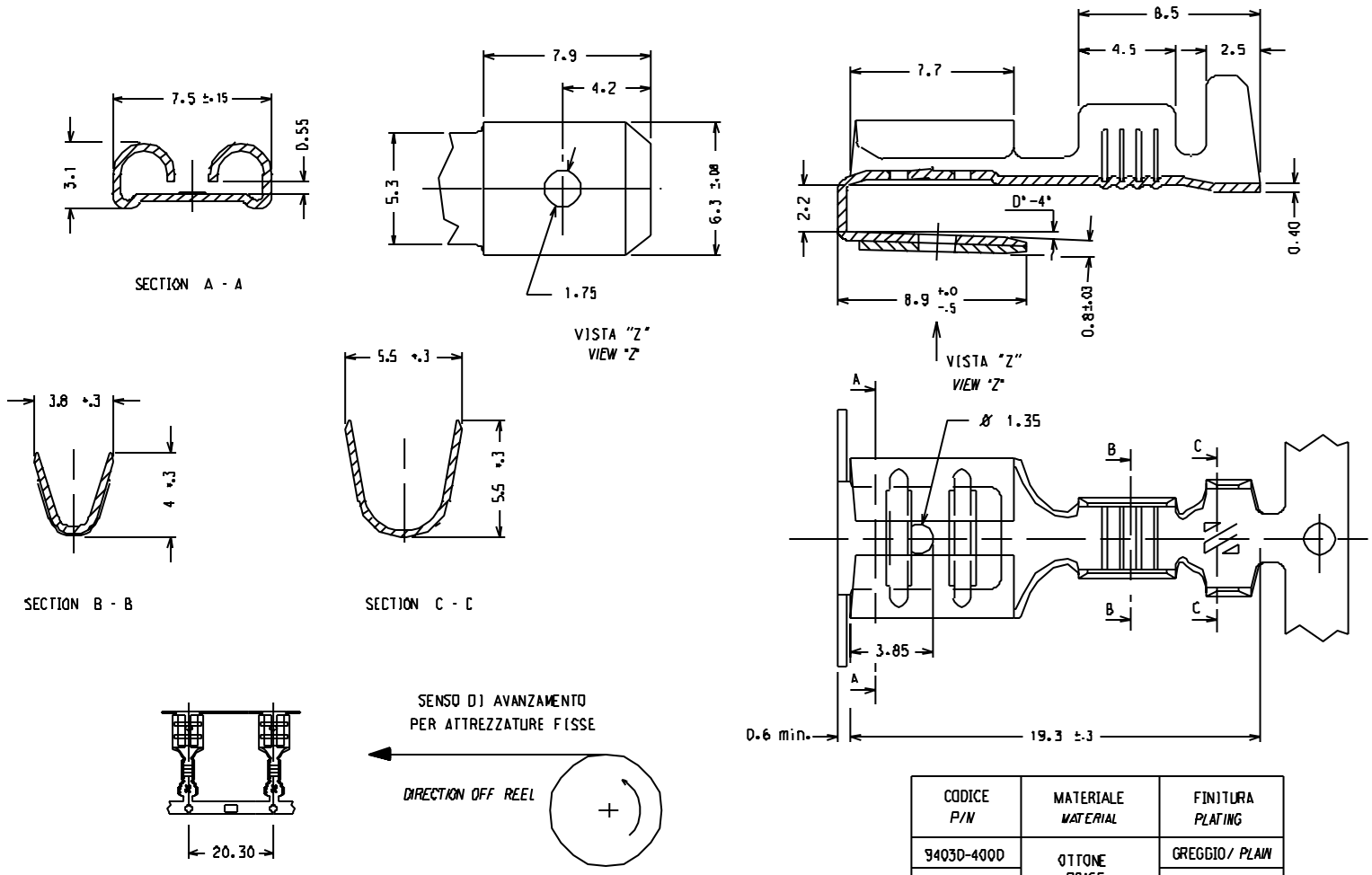

CODICE P/N	MATERIALE MATERIAL	FINITURA PLATING
94030-4000	OTTONE BRASS	GREGGIO/ PLAIN
94030-4001		STAGNATO/ TIN

LTR	REVISIONS	
A	EMESSO 29-03-90	

DIMENSIONS SHOWN (METRIC) (INCH)

UNLESS OTHERWISE SPECIFIED TOLERANCES: ANGULAR ± 2°

	(INCH)	(METRIC)
3 PLACE	±	
2 PLACE	±	± 0.1
1 PLACE		± 0.2

DESIGN DIMENSION (PRIMARY) ☒ (MM) ☐ (IN)

EQUIVALENT DIMENSION (SECONDARY) ☐ (MM) ☐ (IN)

DRWN BY: Cattorda

CHK'D BY:

APP'D BY: Previato

SCALE: 5 : 1

REVISE ONLY ON CAD SYSTEM | SH. | REV.

CADCAM FILENAME: Z3040000S

THIS DRAWING CONTAINS INFORMATION THAT IS PROPRIETARY TO MOLEX INC AND SHOULD NOT BE USED WITHOUT WRITTEN PERMISSION

TITLE: CAPOCORDA RIPARTITORE PER MASCHIO 6.3 x 0.8
OIK KONNECT PIGGY BACK RECEPTACLE FOR 6.3 X 0.8 TABS

SEZ. FILE/ WIRE RANGE: 1.0-2.5 mm² — ISOLANTE/INS. RANGE: Ø 2.7-4.3 mm

MOLEX INCORPORATED

SHEET NO.: 1/1 | DATE: 28-03-90

PART NO.: VEDI TABELLA / SEE CHART

DWG NO.: 94030-400X-SD

SIZE: B